C.I.P.	9 x 56 Mannl. Sch. Country of Origin: AT	TAB.	I
		Date	95-06-28
		Revision	05-07-01

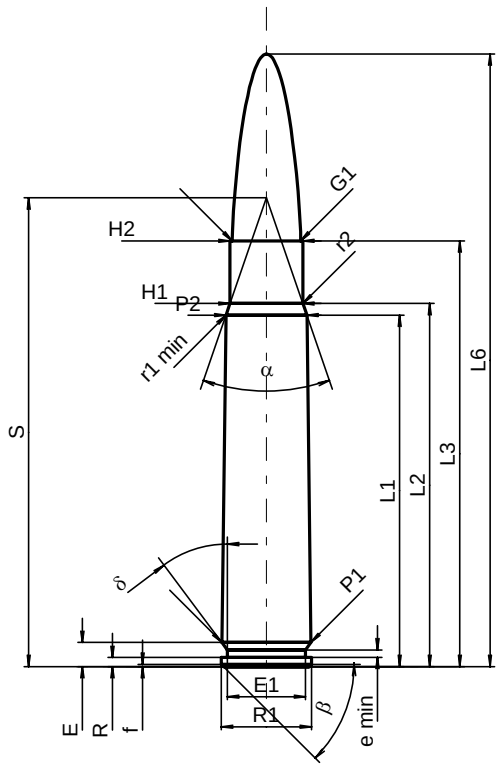

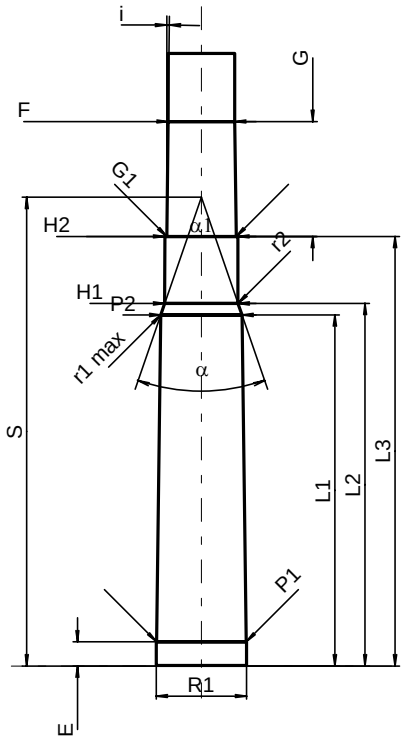

Scale 1:1

CARTRIDGE MAXI

Lengths

L1 1)*	=	46.48	-0.20
L2 1)*	=	48.00	-0.20
L3 1)	=	56.30	
L4	=		
L5	=		
L6	=	81.00	

Case Head

R	=	1.20
R1	=	11.90
R3	=	
E	=	3.20
E1	=	10.30
e min	=	1.00
δ	=	36°52'12"
f	=	0.30
β	=	45°

Powder Chamber

P1	=	11.80	
P2 1)*	=	10.70	-0.20

Junction Cone

α	=	38°06'33"
S	=	61.97
r1 min	=	0.50
r2	=	0.50

Collar

H1 *	=	9.65
H2 1)	=	9.65

Projectile

G1 1)	=	9.08
G2	=	
F	=	
L3+G 1)	=	71.50

Pressures (Energies)
Method Transducer

Pmax	=	2080	bar
PK	=	2392	bar
PE	=	2600	bar
M	=	25.00	
EE	=	2815	Joule

Miscellaneous Dimensions

Fe 1)	=	0.15
delta L	=	

CHAMBER MINI

Lengths

L1 *	=	46.41
L2 *	=	47.93
L3 1)	=	56.80

Breech

R	=	1.20
R1	=	11.95
R2	=	
R3	=	
r	=	

Powder Chamber

E	=	3.20
P1 1)	=	11.85
P2 *	=	10.75

Junction Cone

α 1)	=	38°06'33"
S	=	61.97
r1 max	=	0.50
r2	=	0.50

Collar

H1 *	=	9.70
H2 1)	=	9.68

Commencement of Rifling

G1 1)*	=	9.18
G 1)*	=	15.20
α1	=	180°
h	=	
s	=	
i 1)	=	0°42'58"
w	=	

Barrel

F 1)*	=	8.80
Z 1)	=	9.15

Grooves

b	=	4.40	
N	=	4	
u	=	280.00	
Q	=	64.04	mm²

Dimensions in << mm >>
Dimensions and Tolerances for Proof Barrels
see Appendix CR 1.

Notes: 1) Check for safety reasons
* Basic dimensions